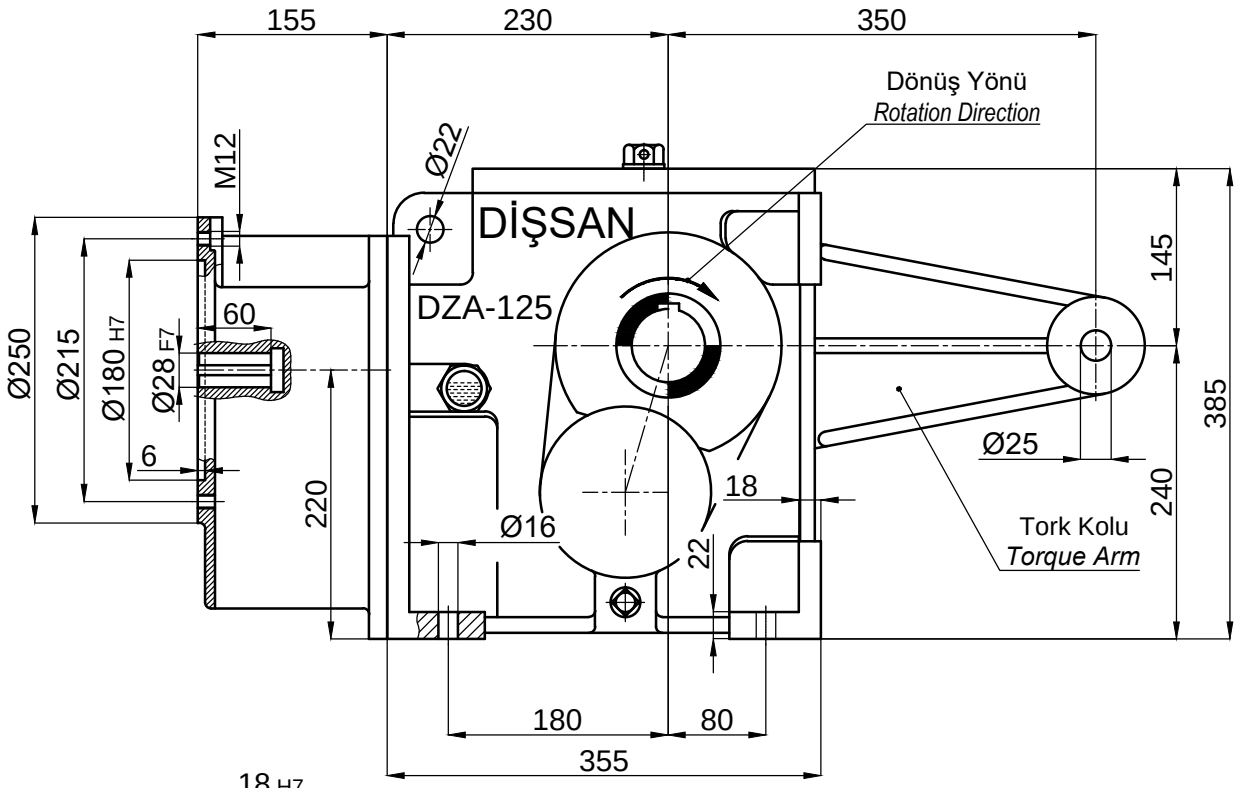


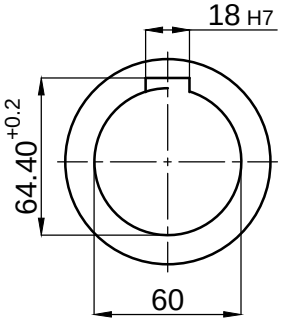


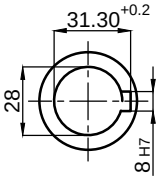


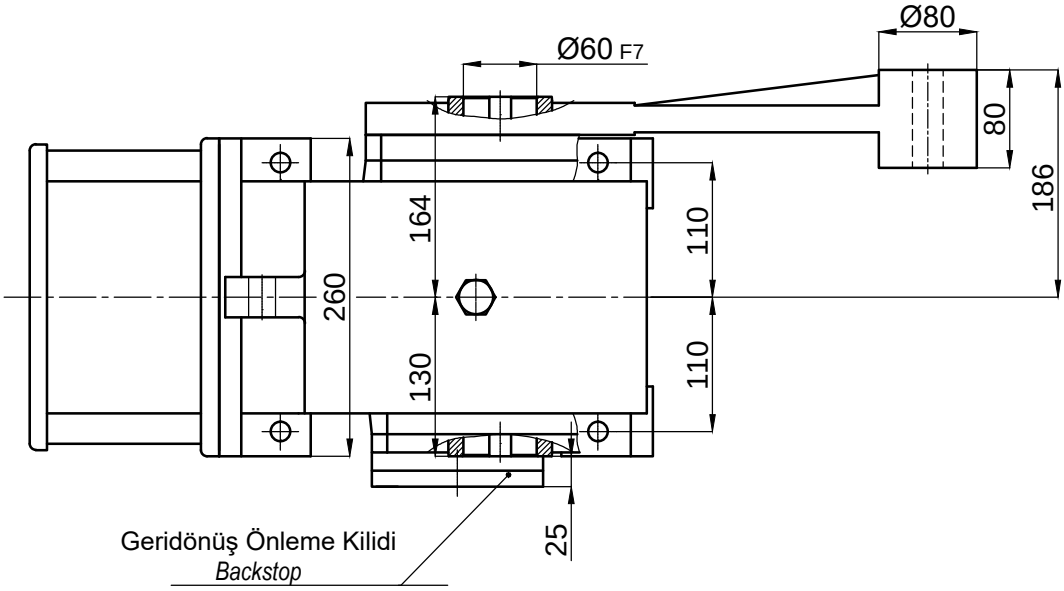


| | İsim / Name | Tarih / Date | HELİSEL VE KONİK DİŞLİLİ, MİLE GEÇME , IEC B5 FLANŞLI MOTOR ADAPTÖRLÜ, TORK KOLLU, MOTORSUZ, KİLİTLİ REDÜKTÖR<br>*HELICAL-BEVEL GEAR UNITS, SHAFT MOUNTED, WITH IEC B5 MOTOR ADAPTER,WITH TORQUE ARM, WITHOUT MOTOR, WITH BACKSTOP* | | | | |
|---|---|---|---|---|---|---|---|
| Çizen / Drawer | - | - | | | | | Dişsan |
| Kontrol / Control | - | - | Resim No / Drawing No | **DZGN3-125.K11-T2/100** | | | |
| Onay / Approve | - | - | Malzeme / Material | - | Adet / Quantity | - | Ölçek / Scale 1/1 A4 |